COMBI 1010/5 WH

Junction box, polypropylene



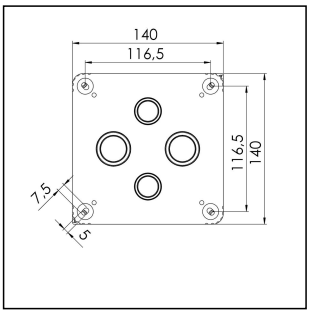

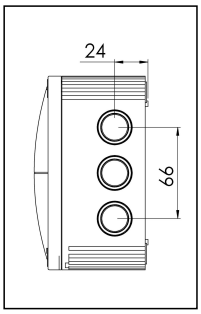

Products may differ in size, colour and appearance to those shown. If you require further information or customisation, please contact us directly.

Material	Polypropylene
Material sealing gasket	TPE
Temp. range min	-30 °C
Temp. range max	100 °C
Temperatures during install.	-5 °C - 60 °C
Protection class	IP66 / IP67
Glow wire test	750 °C
Voltage	690 V
Rated current / A (Terminal)	57 A
Rated cross section	10 mm²
Terminals/poles	5-pole, 10,0 mm²
Fixing	4 internal openings
Ø cable diameter min	6 mm
Ø cable diameter max	21 mm
External dimensions LxWxH	140 x 140 x 82mm
Using for cable gland	
Product Color	RAL 9001
WISKA-Order no.	10062211
Type	COMBI 1010/5 WH
Packing unit	2
EAN number	4007685622110
Tariff number	85369010
ETIM-Classification	EC002600

Remarks:

Your Contact:
WISKA UK Ltd.
Unit 7, Hurling Way · St. Columb Major Business Park · TR9 6SX, St. Columb Major, Cornwall · Great Britain
☎ +44-12-08816062 · 🖷 +44-12-08816708
info@wiska.co.uk · www.wiska.co.uk

Other technical data on request / subject to change without notice

IP66: using the QUIXX self sealing membrane screw

IP67: using the knockout entry together with ESKV cable gland

Equipment:

- 10 knockouts side 5x M25/M32; 2x M20; 3x M20/M25

- 4 knockouts in the bottom 2x M25/M32; 2x M20/M25

- 4 captive cover screws

- including QUIXX EMS self-sealing membrane screw 2x M25; 1x M32

- including terminal block 5-poles, 10mm²

Mounting:

4 internal openings outside of the sealing area

Recommended accessories

MP-L Mounting plate large COMBI / WHK	10105775
External mounting - COMBI LG	10108836

Spare parts

SP-HKT 1010 Terminal block	22000408

19.09.2023

Your Contact:
WISKA UK Ltd.
Unit 7, Hurling Way · St. Columb Major Business Park · TR9 6SX, St. Columb Major, Cornwall · Great Britain
☎ +44-12-08816062 · 🖷 +44-12-08816708
info@wiska.co.uk · www.wiska.co.uk

Other technical data on request / subject to change without notice

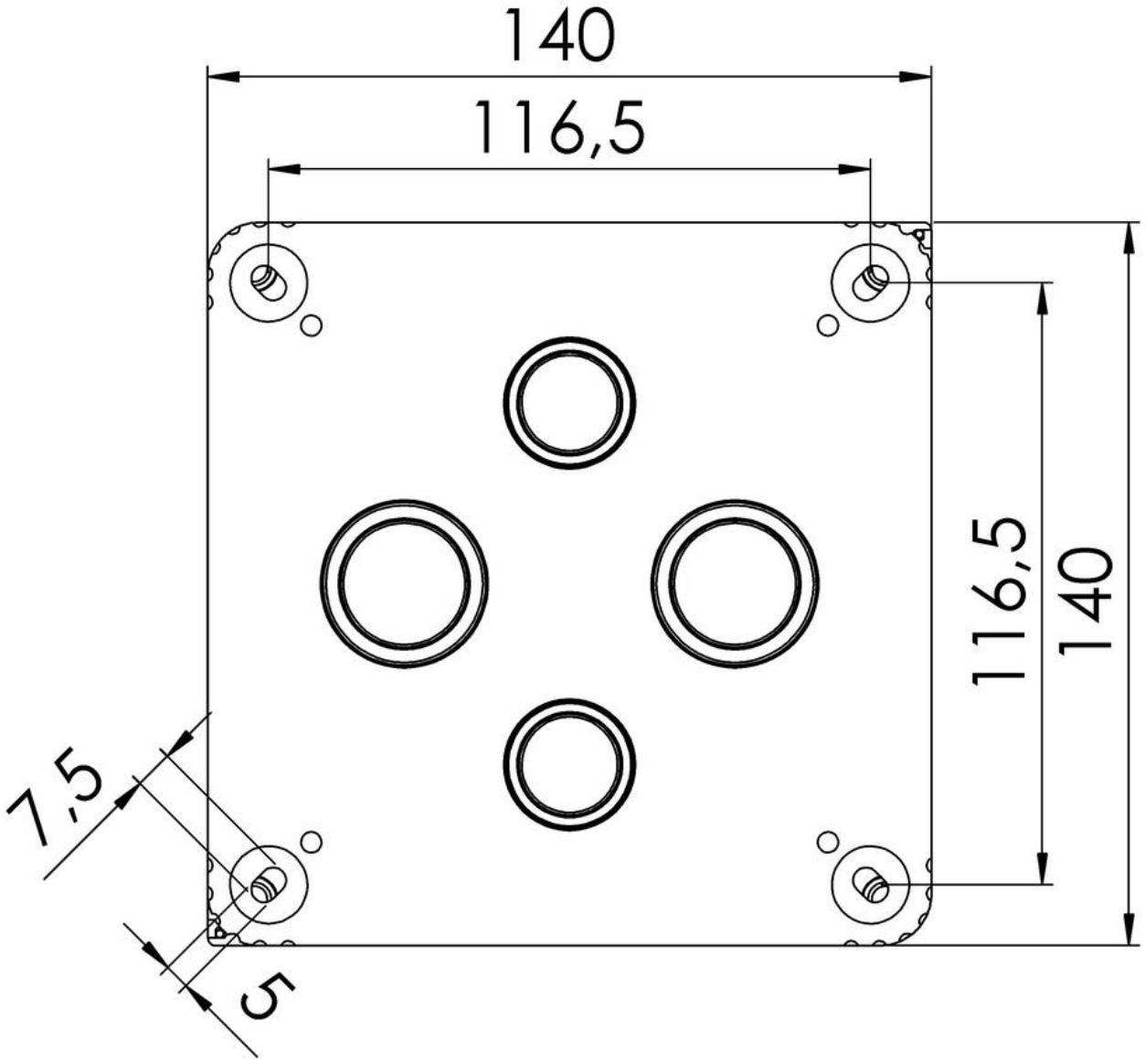

Your Contact:
WISKA UK Ltd.
Unit 7, Hurling Way · St. Columb Major Business Park · TR9 6SX, St. Columb Major, Cornwall · Great Britain
☎ +44-12-08816062 · 🖷 +44-12-08816708
info@wiska.co.uk · www.wiska.co.uk

Other technical data on request / subject to change without notice

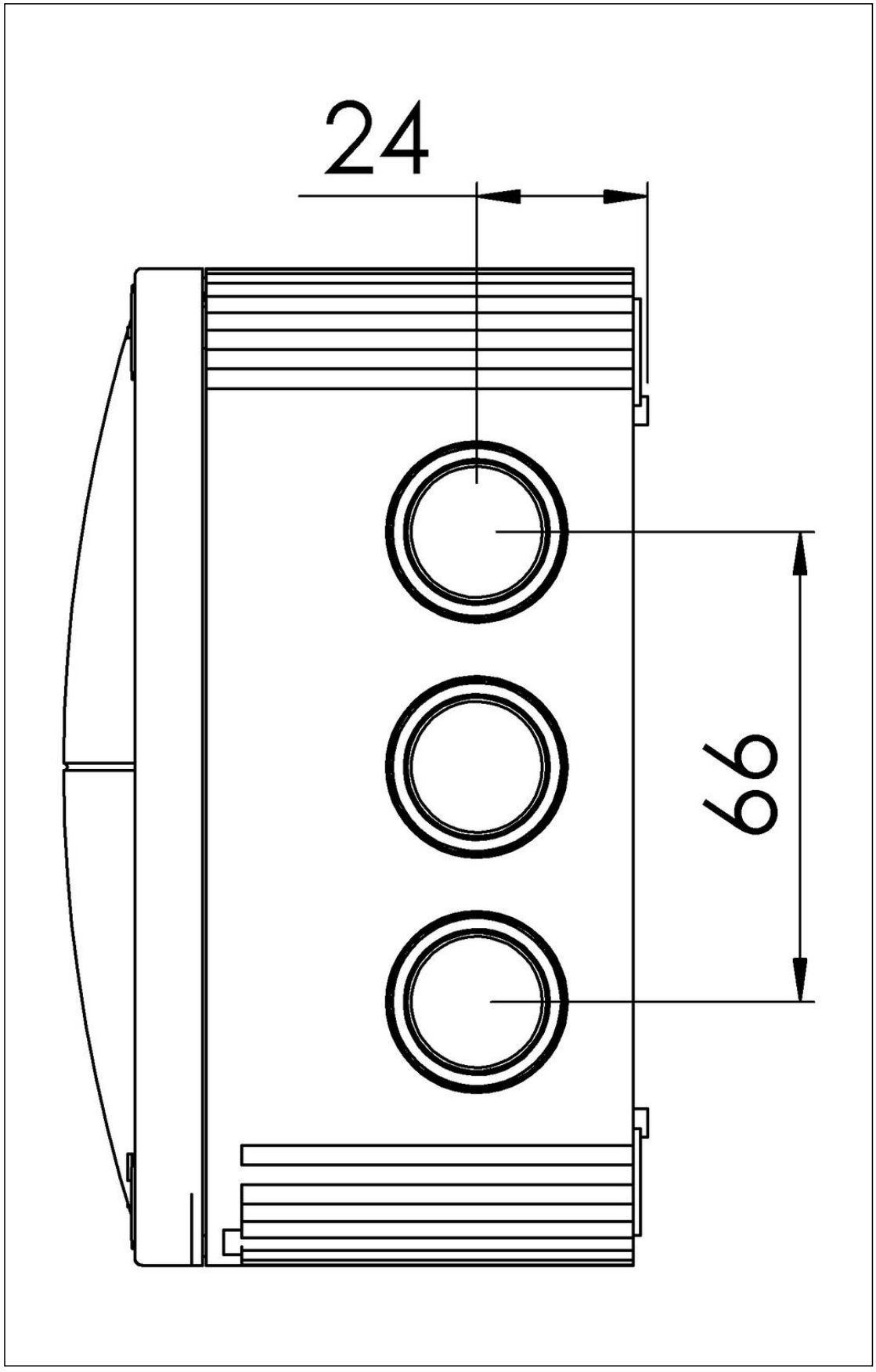

Your Contact:
WISKA UK Ltd.
Unit 7, Hurling Way · St. Columb Major Business Park · TR9 6SX, St. Columb Major, Cornwall · Great Britain
☎ +44-12-08816062 · 🖷 +44-12-08816708
info@wiska.co.uk · www.wiska.co.uk

Other technical data on request / subject to change without notice